Torino Tub and Shower Faucet

522029（SN）– 522037（BB）

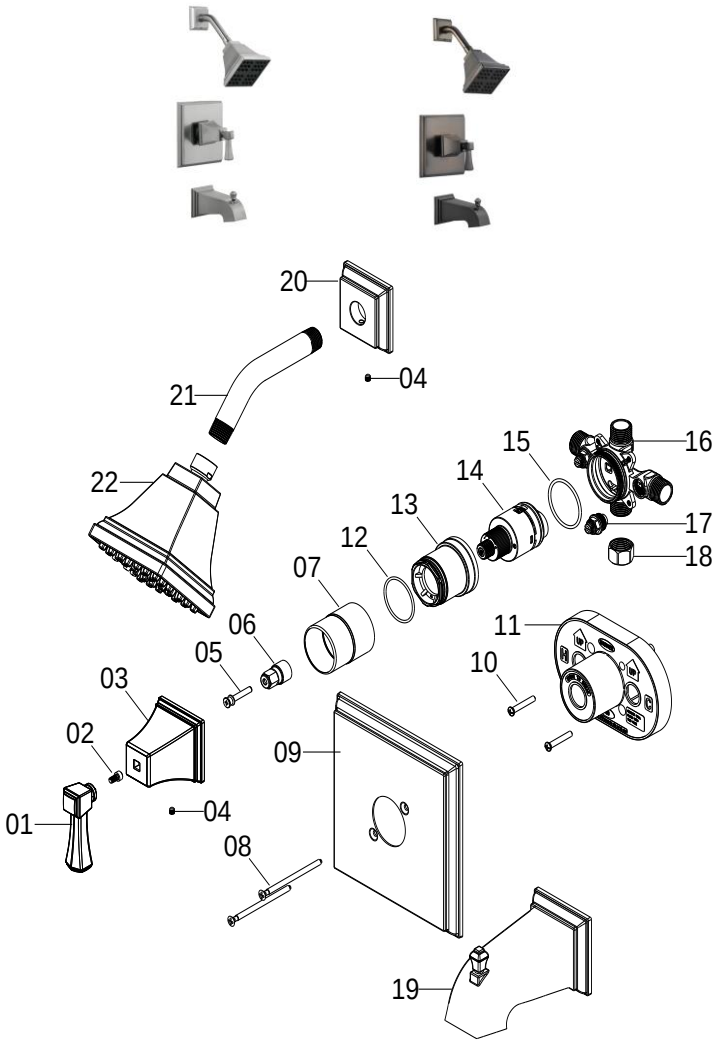

DESIGNHOUSE

NO.	RP NO.	PAT NO.	DESCRIPTION	MATERIAL	QTY	522029（SN） Order Code	522029（SN） List Price	522037（BB） Order Code	522037（BB） List Price
#01	RP1313204	3.15.873.100010-04	HANDLE	ZINC	1				
#02		3.10.F808S.030010-00	SCREW	SUS					
#03		3.15.873.850010-04	HANDLE SEAT	ZINC					
#04	RP50002	3.10.407A.020010-200	SET SCREW	SUS	1				
#05	RP50020	3.11.873.810010-3601	SCREW	METAL	1				
#06	RP64043	3.15.832.620011-3602	INVERTER	ZINC	1				
#07	RP8003204	3.01.873.420010-04	SLEEVE	BRASS	1				
#08	RP5002604	3.10.40400.020010-20	SCREW	SUS	2				
#09	RP8004504	3.15.832.670010-04	ESCUTCHEON	BRASS	1				
		3.20.873.400010-00	WASHER	PLASTIC	1				
		3.20.875.260010-00	WASHER	PLASTIC	1				
#10		3.10.6036.010810-00	SCREW	SUS	2				
#11		3.24.875.11D610-00	CAP	PLASTIC	1				
#12	RP60018	3.30.F533.060010-00	O-RING	RUBBER	1				
#13	RP70295	3.15.873.41C010-01	BONNET	ZINC	1				
#14	RP20075	3.35.873.030012-00	CARTRIDGE	HYBRID	1				
#15	RP60101	3.30.H3555.060010-00	O-RING	RUBBER	1				
#16		3.01.873.24G010-113	BODY	BRASS	1				
#17	RP70599	3.01.875.13C010-00	STOP VALVE	BRASS	2				
#18	RP70365	3.01.875.21V010-113	PLUG	BRASS	1	908095	$3.47	908095	$3.47
#19	RP3301304	4.15.980.0004	SPOUT	ZINC	1				
#20	RP3801304	3.15.832.660010-04	SHOWER FLANGE	ZINC	1				
#21	RP3804704	3.10.875D.210010-04	SHOWER ARM	SUS	1				
#22	RP3816604	4.24.51131.W004-00H	SHOWER HEAD	PLASTIC	1				